NOEMA
media & publishing

Cosmological Elements

步天歌

星河角落 ×《中国国家天文》科学艺术展

Cosmological Elements

Chinese National Astronomy Art & Science Exhibition

Cosmological Elements
Chinese National Astronomy Art & Science Exhibition
《步天歌》
中国国家天文科学艺术展

Edited by Claudia Schnugg and Iris Long
2nd bilingual English/Mandarin Edition 2025
编辑：龙星如，Claudia Schnugg
中 / 英文第二版，2025

NOEMA
media & publishing

Cosmological Elements
Edited by Claudia Schnugg and Iris Long
《步天歌》
编辑：龙星如，Claudia Schnugg

© 2025 Noema, Ravenna
2nd bilingual English/Mandarin Edition
1st Edition 2024
中 / 英文第二版，2025
第一版，2024

Texts by Claudia Schnugg, Iris Long and Angel An
Many thanks to all exhibiting artists, the exhibition team, and Chinese National Astronomy
Layout and graphics by on paper

文字：Claudia Schnugg，龙星如，安久
致谢所有参展艺术家，展览团队，《中国国家天文》
设计及排版：on paper

© 2025 Noema
ISBN: 979-12-985585-0-2

NOEMA
media & publishing

https://noema.media

参展艺术家 Artists

Agnes Meyer-Brandis
安久 Angel An
Angela Davies
Ani Liu
Anna Hoetjes
Aoife van Linden Tol
Cath Le Couteur and Nick Ryan
Daniela Brill Estrada
Eli Joteva
阅壤小组 Reading Soil Group
Florian Voggeneder
钱正昊 Jefferson Qian
Jennifer Allora and Guillermo Calzadilla with Ted Chiang
Lucy McRae
Makoto Azuma and Shiinoki Shunsuke
Michèle Boulogne
陈明强 Mingqiang Chen
Quadrature
Ranjit Bhatnagar
李昊哲 Seph Li
董书畅 Shuchang Dong
Victoria Vesna
易炜寒 Weihan Yi

目录 Contents

前言 Foreword 001 - 003

宇宙学元素
Cosmological Elements

策展人导言 Curators' Words 004 - 006

展览故事线 Exhibition Storyline 007 - 010

作品介绍 Artwork Information 013 - 072

作品图片 Installation Views 073 - 092

平行论坛 Panel Talks 093 - 120

比较行星学和陨石的冥想
Comparative Planetology & Stardust

如何绘制你不可见之物：天文图像小史
How to Paint What You Can't See

读书研讨会：《对太空的征服及人的定位》
A Reading Session on "The Conquest of Space and The Stature of Man"

展览团队 Exhibition Team 121 - 122

前言 Foreword

宇宙学元素 Cosmology - Cosmological

安久 Angel An

在古巴比伦，人们绘制出夜空中明亮的星系，并对其形状化繁至简进行勾连。当在命名星座的时候，有许多是基于我们对神像与动物形态的想象，同时我们也承继了浩繁美丽的天文神话和传说。宇宙艺术自此由来已久。

我们举办这次展览的初衷，就是希望通过这种方式，让人们感知宇宙的浪漫。作为一名天体摄影师，我坚持做天体摄影已经七个年头了，我切盼经由各式的艺术媒介，把在荒野中不期而遇的夜空之美呈现给观众们。虽然越来越先进的技术可以帮助我们观测和进一步探索宇宙，但我们意识到人类也是这幅宏伟画卷的重要组成部分。无论是透过可被观测的银河系，还是通过探测天体、亚原子粒子、暗物质和暗能量，它们不仅描绘了客观现实，也揭示了人类与宇宙之间深刻而神秘的关联。对于居住在城市的人们，我们希望通过这个展览为他们创造游弋宇宙的可能。

通过展览，我们首先可以看到自隋唐以来流传下来的多种版本的“步天歌”，这是古人认识星辰的方式。在步量天地之间，我们与星辰遥相呼应。中国古人将星空划分为三十一大区，以此观测星空运行规律、测定岁时季节等。在那个时代，这首口诀只在天文台传颂，难为寻常百姓所知。然而随着时间的推移，我们已从古老的中国天文学档案中，揭开了这些神秘的记载。宇宙已不再仅仅是研究者的专属领域，如今它已成为了艺术家、作家、音乐家和众多业余天文爱好者的创作之地。这个展览更进一步延展了科学艺术展览“步天计划”的公益艺术项目，邀请艺术家们共同讲述宇宙故事，传达人文情怀。这不仅以富有创意的方式科普了天文知识，也启发人们深思自身与宇宙之间的深层关联。“步天计划”计划包括但不限于招募和支持艺术家们，借助天文艺术装置、星体摄影、音乐、诗歌等多种表现形式，去诠释和实现他们与天文学或宇宙叙事所关切的奇思妙想。

通过与大学的毕业设计项目合作，举办与艺术学校联动的艺术招募活动，以及策划了诸如“太空来信”等诸种活动，繁星点缀的苍穹已成为人人皆可欣赏到的美丽景象。我们举办展览的初衷也达到了，即让每个人都能仰望星空。

从这次展览的隐喻出发，我们可以探索人类对空间的崇敬和赞叹，催生了对深空可视化的想象力，也深入探讨了科学研究的元素。同时，它也暗示了我们与宇宙之间深刻而隐

秘的联系。展览进而从“隐藏的维度”、“宇宙生态”和“漂流的文明”三个角度，展开对宇宙空间和个体生命之间关系的思辨。为了这次展览，我们特邀了来自 10 个国家的来自全球的艺术家，一同仰望浩瀚广袤的夜空，踏上宇宙的终极浪漫之旅，思考人类与寰宇的同音共律。

我们不时凝望那绚烂的星空，仿佛这是镌刻在人类基因中的本能，去破译星空下的宇宙，参详我们的命运。持续探寻、觉察和遐思吧。

In ancient Babylon, people mapped out the bright stars of the night sky and turned them into simple shapes. While many are based on our imaginations of divine figures and animals, we also inherited many beautiful astronomical myths and legends when naming the constellations. The art of the universe has existed for a long time.

The initial idea for this exhibition is that we hope this would be a way of how people perceive the romance of the cosmos. As an astrophotographer, I've been doing astrophotography persistently for seven years, and I aspire to bring the beauty of the night sky I encountered in the wilderness to the audience through various artistic media. While more and more advanced technologies can help us to observe and to further explore the universe, we realize human beings are also an important part of this grand picture. Either through the observable milky way or by detective celestial bodies, subatomic particles, dark matter, and dark energy, not only have they depicted the objective reality, but also have revealed the profound and mysterious connection between human and the universe. To those who live in the cities, we hope to make it possible for them to roam the cosmos through this exhibition.

Through the exhibition, we can first see the multiple versions of "star-pacing songs" that have been passed down since the Sui and Tang dynasties, and it is the ancient way of understanding the stars. In pacing out heaven and earth, we commune with the stars. The ancient Chinese have divided the night sky into thirty-one regions and used this system to predict the seasons and to grasp the laws of movement in the night sky, etc. During that time, the song was only disseminated in observatories without spreading among ordinary people. However, with the passage of time, we have revealed these confidential archives from ancient Chinese astronomy. As the universe is no longer the sole province of researchers; it has become an area of engagement and creation for artists, authors, musicians, and many amateur astronomers. The exhibition has also outreached the "star-pacing" public welfare program, which enables all to share their stories of the universe and to convey humanistic concerns. While popularizing the astronomy through a more creative way, it inspires people to explore the universe and reflect on their place in it. "The Star-Pacing Project" includes, but is not limited to recruiting and assisting artists to implement and achieve their ideas related to astronomy or the narration of a cosmic story through astronomical art installations, astrophotography, music, poetry, and other forms of expression.

By linking graduation design projects from universities, launching art recruitment campaigns with art schools, and organizing different activities such as "Space Letters," the starry sky has become a beautiful sight accessible to everyone. Our intention of organizing the exhibition also has been achieved, which is that everyone can look up at the stars.

Starting from the metaphor of this exhibition, we can explore humanity's reverence and appreciation for space, promote the imagination of deep space visualization, and delve into the elements of scientific research. At the same time, it also hints at the profound and hidden connection between us and the universe. The exhibition unfolds the relationship between cosmic space and individual life from three perspectives: hidden dimensions, cosmic ecology, and drifting civilizations, prompting the reflection on the connection between the two. For this exhibition, we have invited international artists to look up at the vast night sky, venture on a journey to the ultimate romance of the universe and think about the deep connection between humans and the universe.

We constantly gaze up at the shining starry sky above as if it's an instinct etched into our human genes to uncover the universe beneath the starry heavens and reflect on our destiny. Keep exploring, discovering, and ruminating.

策展人导言 Curators' Words

Claudia Schnugg / 龙星如 Iris Long

“宇宙学”一词来自古希腊文 kósmos (κόσμος) 和 -logía (-λογία) 的结合，其含义为“对世界的学习”。宇宙学也将自然科学与哲学，物理与形而上学，自然研究的方法与信仰、神话、宗教甚至更深奥的事物连接在一起。

展览“步天歌”从几个角度探讨了关于宇宙的要素：科学提问构成宇宙空间的基础元素是什么，这些基础之物也会成为我们研究地球生命的重要依据；这些“宇宙元素”也能在地球生命的体内找到。同时，我们也根据人类历史上各种科学研究中不断建立起来的若干想法，寻找外太空的生命。“宇宙元素”不仅仅是一个纯然的科学问题，也带有文化基因，并关于我们如何讲述关于世界的故事。这些“宇宙要素”是否会在时间中变化呢？哲学家和物理学家凯伦 · 巴拉德（Karen Barad）谈论了当前的研究如何“与宇宙半路相遇”，社会科学家本特利 · B · 艾伦（Bentley B. Allan）则试图了解在主流叙事中的宇宙学元素如何转化为社会生活中的目标、愿景和讨论。在太空变得更触手可及，更多人愿意投身深空探索的当下，我们怎么将对“宇宙要素”的思考进一步展开？观察解释宇宙元素的不同方式，也提供了一个机会，让我们探索人类对太空的欣赏和敬畏从何而来，是什么推动了关于太空的愿景和科学调查，科学发现如何推动这些新的愿景，同时也把我们带回了人类与宇宙种种关系之间——这包括人与非人类和“不止人类”的万物的关系。

展览本身从三条线索展开对“宇宙元素”的思考：

我们从构成宇宙和生命的基本物质开始。构成恒星、行星和生命的物理元素和力量，也引导着科学研究对宇宙的种种发现，这些元素往往很难用肉眼看到，因此科学家和工程师开发了多种技术和仪器使之能被我们直接感知。卡尔 · 萨根将这些基础层面的探索描述为“超凡的证据”（extraordinary evidence）。因为它既能提供对宇宙的深邃解读，也能展开新的研究维度，同时，这些隐藏维度里的一切也让我们反观自身的存在，理解我们在宇宙中的位置，激发敬畏之心，让我们体验到生命的弥足珍贵。

接下来，我们将离开隐秘的维度，去体验这些不可见的微小元素与波在广袤寰宇的存在。“宇宙生态”辩证地提出生态思维如何在更广的视角中存在。各种元素形成了有矿物的行星，它可能看似无生命，也拥有形成生命的潜能。我们如何在宇宙意义上思考各种太

空环境，这些非人类和“不止人类”的环境是否只是为了人类的干预、使用和开发？我们如何参与其中，更好地理解它们？我们是否真的了解它们，即使它们与我们近在咫尺？我们在寻找什么，人类首次尝试超越地球的结果是什么？

最后，我们共同思考人类的愿景与任务，那些对于漂流文明的想象，和人类在太空中的未来：它可能交织着希望与敬畏，是天际线的另一面。我们有时也会思考，当我们的地球不再适宜生存，我们将何去何从。饱含诗意与深思的作品提出了人类在太空中长途跋涉的意义，以及如何为这种非同寻常的旅行进行训练等问题，并分享了关于人类正在初步实验的、种种前往新星球的科学技术的设想。这些作品的对话也引向展览最后的一组作品，它们涉及到人类的感官、记忆、梦想、任务和愿景，这些受科幻灵感及美学启发的创作，也把观众带回自身的思考、梦想，以及与世界的联系。当我们作为人类离开地球时，我们会留下什么，让别人找到我们？

Cosmology, from Ancient Greek kósmos (κόσμος) and -logía (-λογία), meaning the "study of the world". As a concept it brings together natural sciences and philosophy; physics and metaphysics; methods to study nature and beliefs, mythologies, religious and even esoteric approaches.

This exhibition discusses the idea of cosmological elements through several lenses: the lens of science that questions what are the elements that constitute objects in cosmos and the space in-between, elements that can also become central to study the universe and life on planet Earth. In that sense, a selection of cosmological elements also constitutes life on Earth as we humans know it. At the same time, we look at life on Earth and search for life in outer space based on several ideas that continuously built up throughout scientific and research endeavors of cultures throughout human history. Such culturally understood cosmological elements manifest in scientific studies, but also in human dreams and stories being told.

But what happens, when shifts of these cosmological elements take place? Philosopher and physicist Karen Barad talks about how the understanding of current research meets the universe half-way, social scientist Bentley B. Allan tries to understand how cosmological elements as understood in dominant narratives translate to overarching goals, visions and arguments in social life. Can we read these ideas also in current approaches and stories of space and how more and more people want to engage with space? At the same time, looking at the diverse ways of interpret cosmological elements also gives an opportunity to explore where human appreciation and awe of space comes from, what drives visions about space, and scientific investigation, how scientific discoveries enable new visions, and at the same time brings us also back to the human relationship with cosmological elements - the non-human and the more-than-human.

The exhibition unfolds continuously throughout three main threads of cosmological elements:

We start by looking at the stuff that the universe and life is made of. The physical elements and forces that constitute stars, planets, and life, are those elements that guide science to investigate the universe and explore its dynamics. These elements are difficult to see with bare eyes, so scientists and engineers have developed multiple methods to investigate them and to make them visible to the human eye. The exploration into this extraordinary evidence does both, it opens the universe for insights and bears vast potentials, and at the same time, it throws us back at ourselves, leads to a reflection of who we are, where we stand in the universe, inspires awe, and lets us experience the preciousness of life.

Taking a next step, we leave the elements and basic investigation behind to experience manifestations of the elements in space - on planets, in the apparent vastness of space, and on Earth. Thereby, space ecology is presented in the dialectics of the cosmological development of ecologies and human interventions and ideas. Elements form planets with minerals, potentially lifeless and potentially life-friendly environments develop and grow. How do they develop and are these non-human and more-than-human environments just there for human intervention, use, and exploitation? How to engage with them and better understand them? Do we actually understand them, even when they are in close proximity to us? What do we search for, and what are the results of humankind’ s first attempts to reach beyond planet Earth?

Finally, we look at more human visions, missions, at ideas of floating civilizations, dreams of potential human futures in space, but also hopes and fears, the other side of silver lining - or what can we think of what happens next, when we ruin the potential to live healthy lives on planet Earth. Poetic reflective works pose questions about what it actually means for a human to be isolated in space, how to train for such extraordinary travels, which is juxtaposed by sharing impressions of scientific and technological first steps of humankind to go to new planets. Starting from the dialogue of these works, further works tackle human senses, memories, dreams, missions, and visions that blur into sci fi inspired aesthetics, but bring the viewer back to their own questions, dreams, and connect to being-in-the-world. Lastly, we ask, what do we leave behind for others to find us, when we as humans leave Earth?

展览故事线

隋唐以来以多个版本传世的“步天歌”，采用三垣、二十八宿将全天星空分为三十一大区，以此观测星空运行规律、测定岁时季节等。被《通志 · 天文略》称誉为“句中有图，言下见象，或丰或约，无馀无失”。而也附言“此本只传灵台，不传人间，术家秘之”，指在观象台等口传却不向民间流传，但随着时光的流逝，我们不但可以“揭开”中国古代天文学史的“秘密档案”，也开始了一段探索宇宙和反观自身命运的暗夜之旅。

当你踏入至暗空间中，一颗蔚蓝色的行星露出了一半的面容，在宇宙大尺度上，还没有一个坐标系统能精确定位这里。它在宇宙中每秒转动约 465 米，并随着太阳系以每秒约 20km 的速度向织女星迈进。

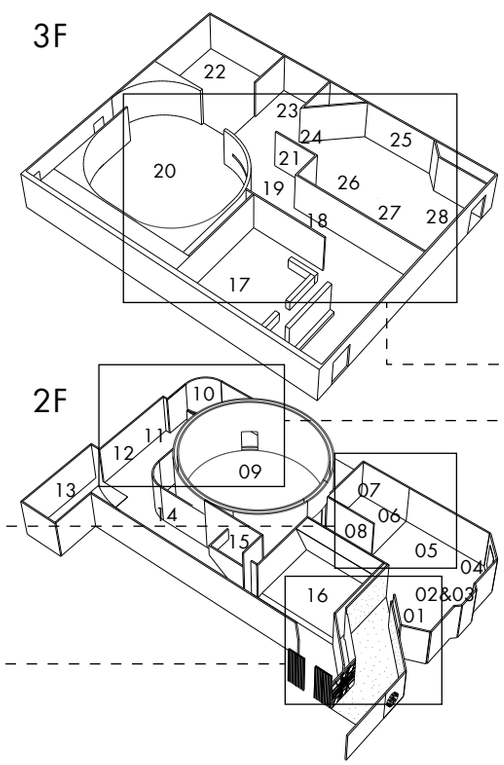

你在这个星河角落邂逅了一座废弃的博物馆，它如同光怪陆离的档案库。这个星球许久未曾下雨，博物馆的地面也覆盖起了白沙。你随着光线的指引，看见泛白的光柱影影绰绰地笼罩着几颗似乎是陨石副本的透明石，上百个元素瓶在空气中悬停。当你走近阅读，发现瓶身的泛黄标签记录着构成此处智慧生命身体的几十亿个原子和恒星之间的隐秘关联。你似乎觉察到了这颗蔚蓝色星球形成阶段的历史。三道蓝色光线引导你走向了一座暗门，内置示波器亮了起来，这里的一切都没有物质构型。你发现了地球生命记录的因生理限制而不可“看见”的所有宇宙光——无线电波、微波和伽马射线。短暂的旅程让你取得了这些微观尺度上的基础资料后，你便来到了一个让所有运算系统离线的宇宙方舟。

离线的好处是你可以安心花一些时间在这座方舟徜徉。这时一片巨大的电离氢区布满了你的眼眸，那是地球生命在距离他们约 5200 光年的地方记录的“玫瑰星云”，星辰为泥，这朵巨大的玫瑰永不枯萎，它也被视为宇宙的终极浪漫。你脚底的星轨随着你不断地前行，而四周响起了地球生命使用“声化技术”创作的来自深空天体的旋律，你透过玫瑰星云的“演奏”收听到了来自这个超过约 130 光年的空域数据，随着你的脚步，声音又被映射到恒星演化至老年的红巨星末期喷射自己外层物质而形成的发射星云之上。

这时一只巨型眼睛在至暗空间深处渐渐浮现，深空测距盘显示它位于宝瓶座方向，距离地球约 700 光年的地方——似乎一颗类似于太阳的恒星正在死亡。博物馆记录显示这片星云被地球生命描述为“上帝之眼”，抑或“NGC7293 螺旋星云”，其颜色结合了氢原子的红色发射线和氧原子的蓝、绿发射线的窄波段图像数据。深空中总是有这样的老年红巨星在生命的末期喷射外层物质，成为绮丽的发射星云，对地表智慧生命来说，他们最熟悉的太阳也许也会拥有着相似的未来。对比恒星数十亿年的寿命，行星状星云只能存在数万年，而这短暂的时间对任何文明长河来说，都显得要极为漫长。你在这里撷取了诸多关于地表、轨道和深空之间的探索痕迹。这里的人们曾经把植物送到大气层边缘，直到这座星球的轮廓在暧昧的蓝雾中描摹它自身。你偶尔尝试向深空发射信号，发现漂移着密密麻麻的信号源承载了地球文明的许多过去。再往深走，一座坍塌的观测设备的仪表盘记录了到访过此处的智慧生命的信息——看来这里的生命形态比你想得要丰茂。

正如你能来到这里，你也见证了很多人类踏上的遥远旅途，他们在“失重训练器”中反复预演深空长旅的心理感受；也在人烟罕至的荒漠中搭起模拟月球或火星的试验场，有一处骤然成了鹅领地；他们中甚至有人离开地表，看着地球在深空升起。你们都在同样的意义上理解过时空和暗夜的规律，在无数个星河角落共同丈量着平行的未来，当黑夜遮蔽眼前的世界时，却揭示一整个闪烁的宇宙。

运算系统似乎开始恢复了通讯，你开始收到断断续续来自极远深空的回响，在离开这里之前，你回头看见几块小小的黑色石碑，刻录了人类记录的潜在有生命的星球坐标——也许，你又要降落在下一个星河角落了。

太空浩瀚，岁月悠长，愿你所遇见的星辰比梦想的多出更多。